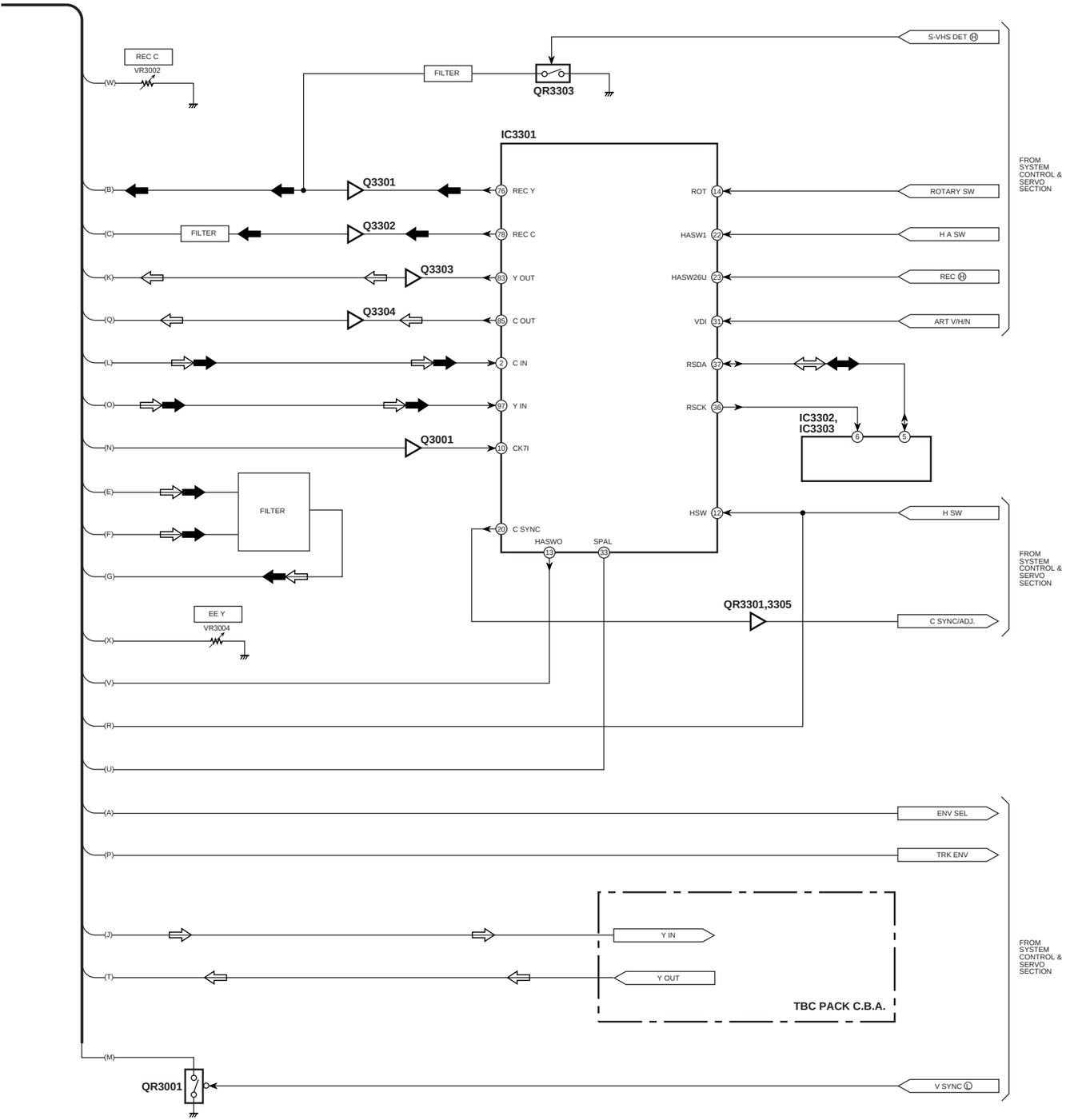
REC C
VR3002
(W)
FILTER
QR3303
S-VHS DET Ⓗ
IC3301
(B)
Q3301
76 REC Y
ROT 14
ROTARY SW
FROM SYSTEM CONTROL & SERVO SECTION
(C)
FILTER
Q3302
78 REC C
HASW1 22
H A SW
(K)
Q3303
83 Y OUT
HASW26U 23
REC Ⓗ
(Q)
Q3304
85 C OUT
VDI 31
ART V/H/N
(L)
2 C IN
RSDA 37
(O)
97 Y IN
RSCK 38
IC3302,
IC3303
6
5
(N)
Q3001
10 CK7I
(E)
FILTER
(F)
20 C SYNC
HASWO 13
SPAL 33
HSW 12
H SW
(G)
FROM SYSTEM CONTROL & SERVO SECTION
QR3301,3305
C SYNC/ADJ.
EE Y
VR3004
(X)
(V)
(R)
(U)
(A)
ENV SEL
(P)
TRK ENV
(J)
Y IN
(T)
Y OUT
TBC PACK C.B.A.
FROM SYSTEM CONTROL & SERVO SECTION
(M)
QR3001
V SYNC Ⓛ