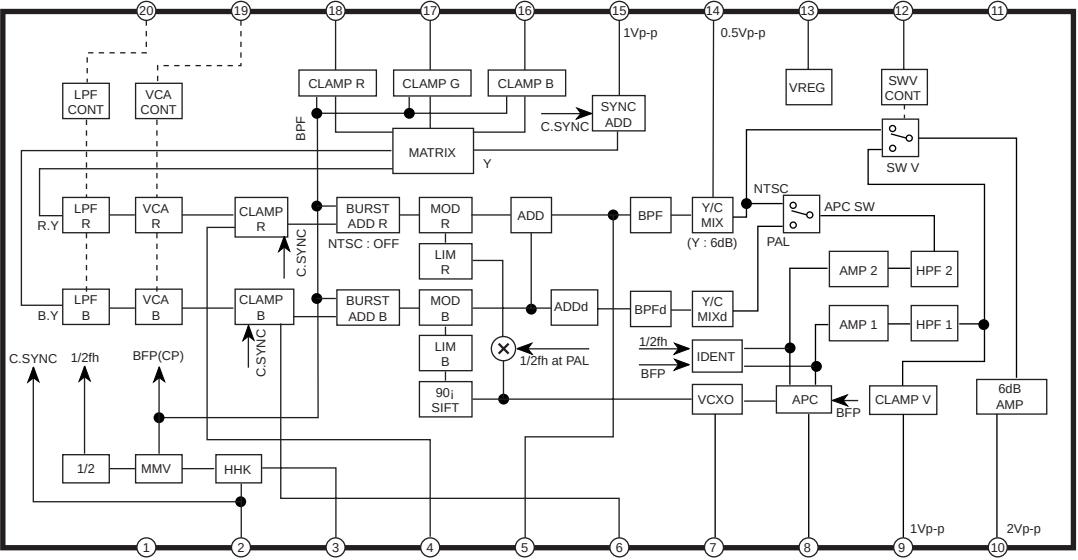
20
19
18
17
16
15
14
13
12
11
1Vp-p
0.5Vp-p
LPF CONT
VCA CONT
CLAMP R
CLAMP G
CLAMP B
SYNC ADD
C.SYNC
VREG
SWV CONT
BPF
MATRIX
Y
SW V
R.Y
LPF R
VCA R
CLAMP R
BURST ADD R
MOD R
ADD
BPF
Y/C MIX
NTSC
APC SW
NTSC : OFF
C.SYNC
LIM R
(Y : 6dB)
PAL
AMP 2
HPF 2
B.Y
LPF B
VCA B
CLAMP B
BURST ADD B
MOD B
ADDd
BPFd
Y/C MIXd
AMP 1
HPF 1
C.SYNC
C.SYNC
LIM B
1/2fh at PAL
1/2fh
BFP
IDENT
C.SYNC
1/2fh
BFP(CP)
90¡ SIFT
VCXO
APC
BFP
CLAMP V
6dB AMP
1/2
MMV
HHK
1Vp-p
2Vp-p
1
2
3
4
5
6
7
8
9
10